AM-801 PORTAL MONITOR

FUNCTIONAL TEST PROCEDURE

WB Johnson Instruments, LLC
6083E 600N
Rigby, ID 83041

Telephone: 208-557-6945 **Email: www.jradmeters.com** **Fax: 208-557-6946**

SECTION	**CONTENTS**
1	GENERAL
2	FUNCTIONAL TEST
3	HIGH VOLTAGE ADJUST
4	CALCULATION OF SOURCE CHECK RANGE
5	SCHEMATICS
ATTACHMENT A	FUNCTIONAL TEST DOCUMENT

1.0 GENERAL

This procedure outlines the steps necessary for performing functional testing of all models of the AM-801 Portable Portal Monitors. The AM-801 comes in four different models as configured below:

AM-801	Standard four (4) detector model – two detectors on each side
AM-801-5-T	Two detectors on each side plus a Head detector
AM-801-5-B	Two detectors on each side plus a Foot detector
AM-801-6	Two detectors on each side plus a Head and Foot detector

Make sure the AM-801 is in the correct model configuration before starting the functional testing described in the following Sections.

2.0 FUNCTIONAL TEST

NOTE: **INFORMATION REQUIRED BY THIS SECTION SHALL BE RECORDED ON ATTACHMENT A – "AM- 801 Functional Test Document"**

2.1 Record the following information:

AM-801 Model
AM-801 Serial Number
Cs-137 Check Source Number

2.1 Place the AM-801 to be tested into the "Area Monitor" mode of operation and set the Alarm Set Point to 10,000 cps – return to Home Screen

2.2 Push "Show All" button in bottom right hand corner of display

2.3 Record the General Test Settings

2.4 Record as Found High Voltage (HV)

2.5 Record the current background counts per second (cps/CPS) of the detectors in use

2.4 Calculate and record the acceptable source check ranges – Section 4 explains the calculations necessary to obtain the source check range.

2.6 Place the Cs-137 check source that came with the AM-801(the serial # will be referenced on the original test document that came with the instrument) in contact with the middle portion of each detector for a minimum of Thirty (30) seconds then record the reading in the As Found Source CPS for each detector in use.

2.6.1 If the source cps fall within the acceptable range for the detector tested record the reading in the As Left Source CPS column – also record the As Found HV in the As Left HV column – no further action for this detector is necessary.

2.6.2 If the source cps fall outside the acceptable range for the detector proceed to Section 3.0 and perform the necessary HV adjustment to bring the cps into the acceptable range – then record the cps in the As Left Source CPS column - also record the new HV setting in the As Left HV column - no further action for this detector is necessary.

2.7 Repeat Step 2.6 for all detectors in use.

3.0 HIGH VOLTAGE ADJUSTMENT

3.1 High voltage (HV) Adjust Pot is located behind the removable plastic hole cover on the face of each detector housing.

3.2 Remove the Plastic Cover for the detector needing adjustment and you will see the white HV adjust potentiometer – FIGURE 1

.

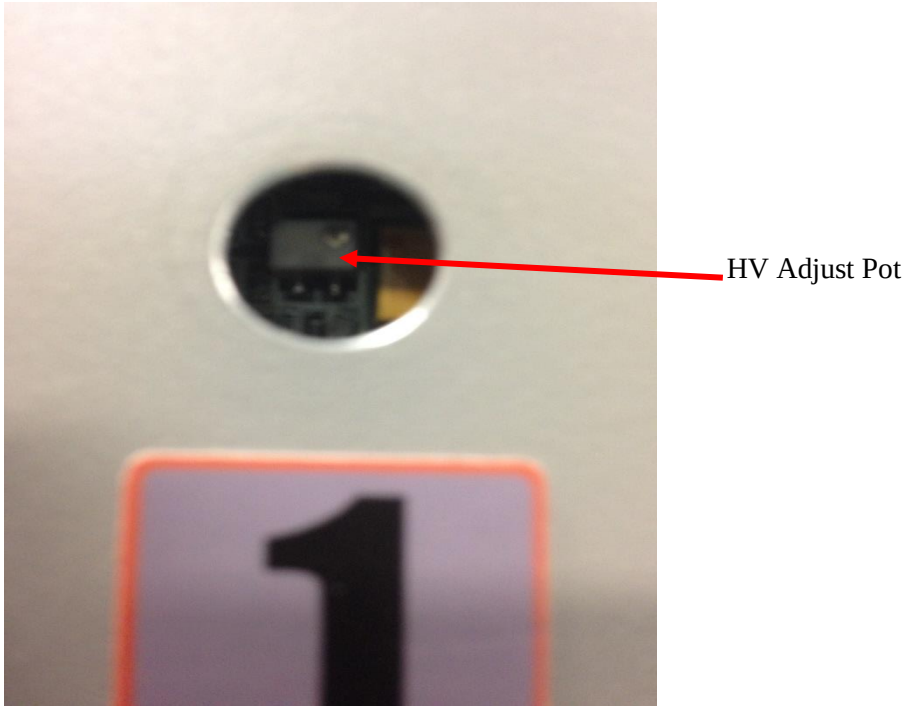

FIGURE 1 – High Voltage Adjust Pot

3.3 Place the Cs-137 Check Source in the middle of the detector to be adjusted making sure the source is in contact with detector.

3.4 Adjust R86 (counter-clockwise to increase – clockwise to decrease HV) until the desired number of cps are displayed.

3.5 Remove the Source and check background cps to see if they are similar to the other background counts of the other detectors.

3.6 If the Source cps and the background cps are satisfactory record new readings under as found data.

4.0 CALCULATION OF SOURCE CHECK RANGE

4.1 Take the cps for each detector that is listed on the "AM-801 Functional Test Document" and using the decay formula for CS-137 calculate the new cps number.

4.2 Take the number of cps calculated in Step 4.1 and multiply by 20%.

4.3 Take the number calculated in Step 4.2 and add it to the number calculated in Step 4.1 this number will become the high number of the acceptable source check range.

4.4 Take the number calculated in Step 4.2 and subtract it from the number calculated in Step 4.1 this number will become the low number of the acceptable source check range.

4.5 Example of calculating the acceptable source check range:

Step 4.1 is 2000cps (decay calculated cps) next Step 4.2 equals 400cps (20% of 2000cps) next 2000cps plus 400cps equals 2400cps next 2000cps – 400cps equals 1600cps this will give you an acceptable source check range of 1600cps to 2400cps.

5.0 SCHEMATICS/COMPONENT LAYOUT

5.1 CONTROLLER BOARD SCHEMATIC

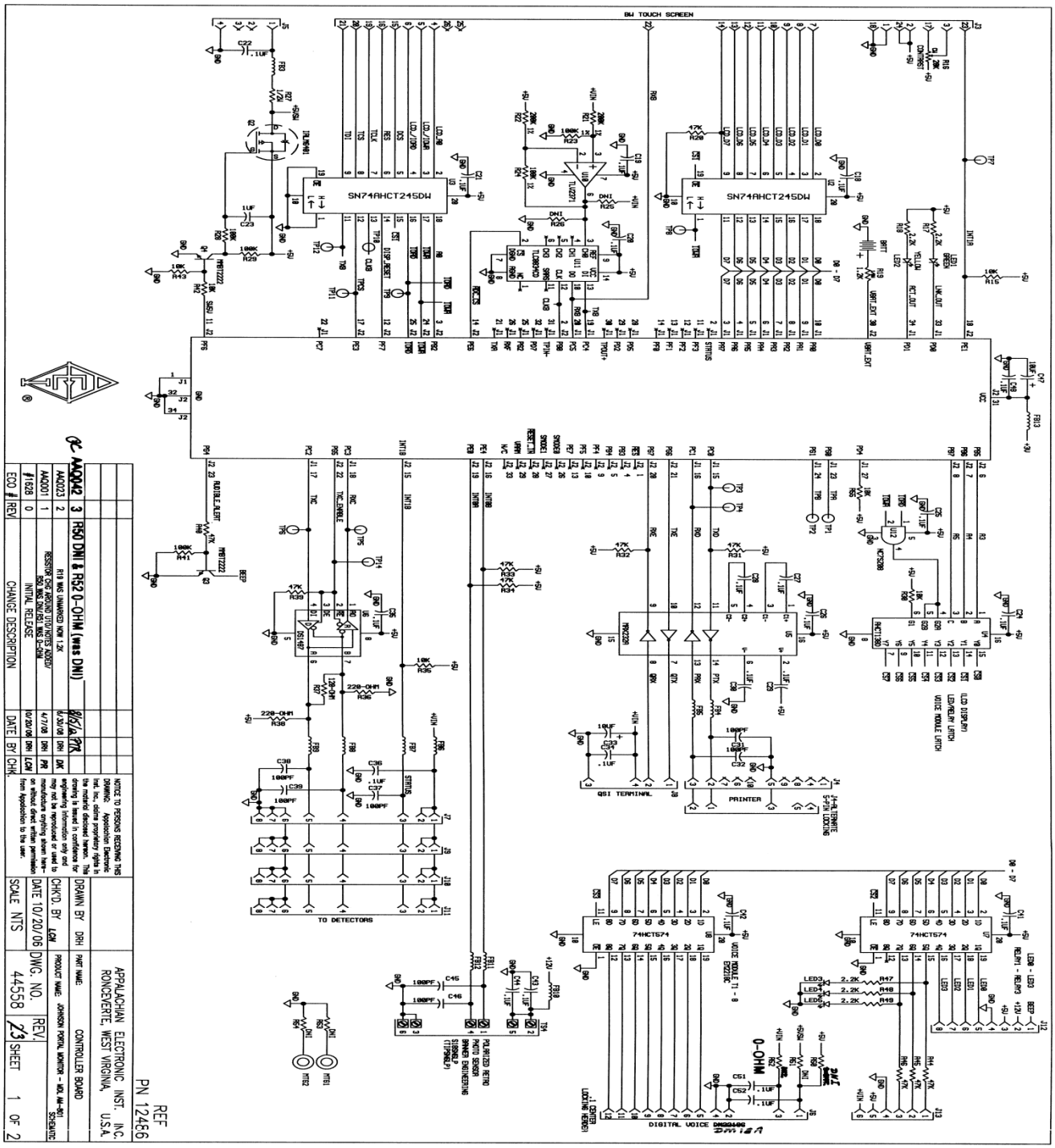

5.2 CONTROLLER BOARD COMPONENT LAYOUT

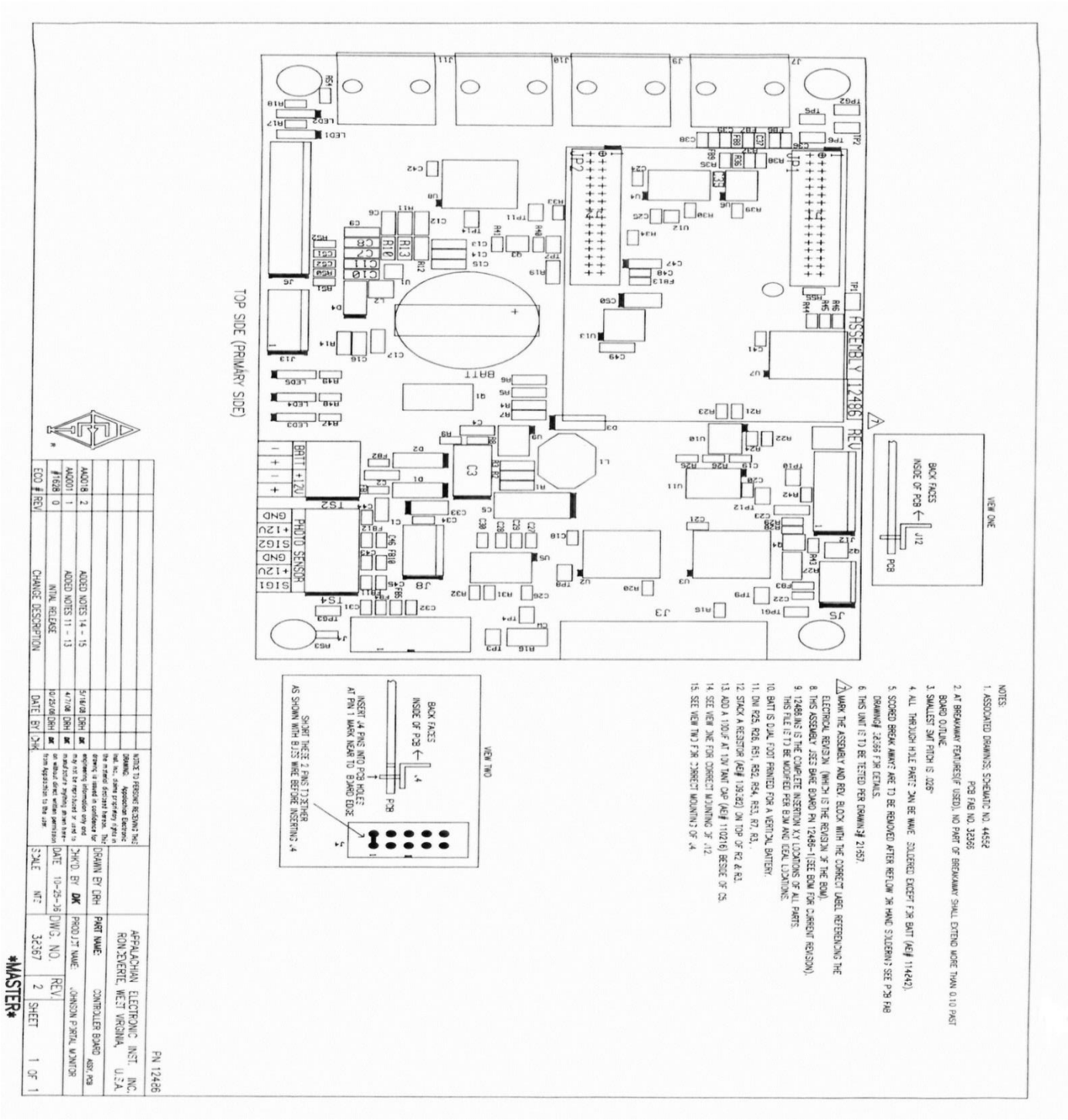

5.3 DETECTOR BOARD SCHEMATIC

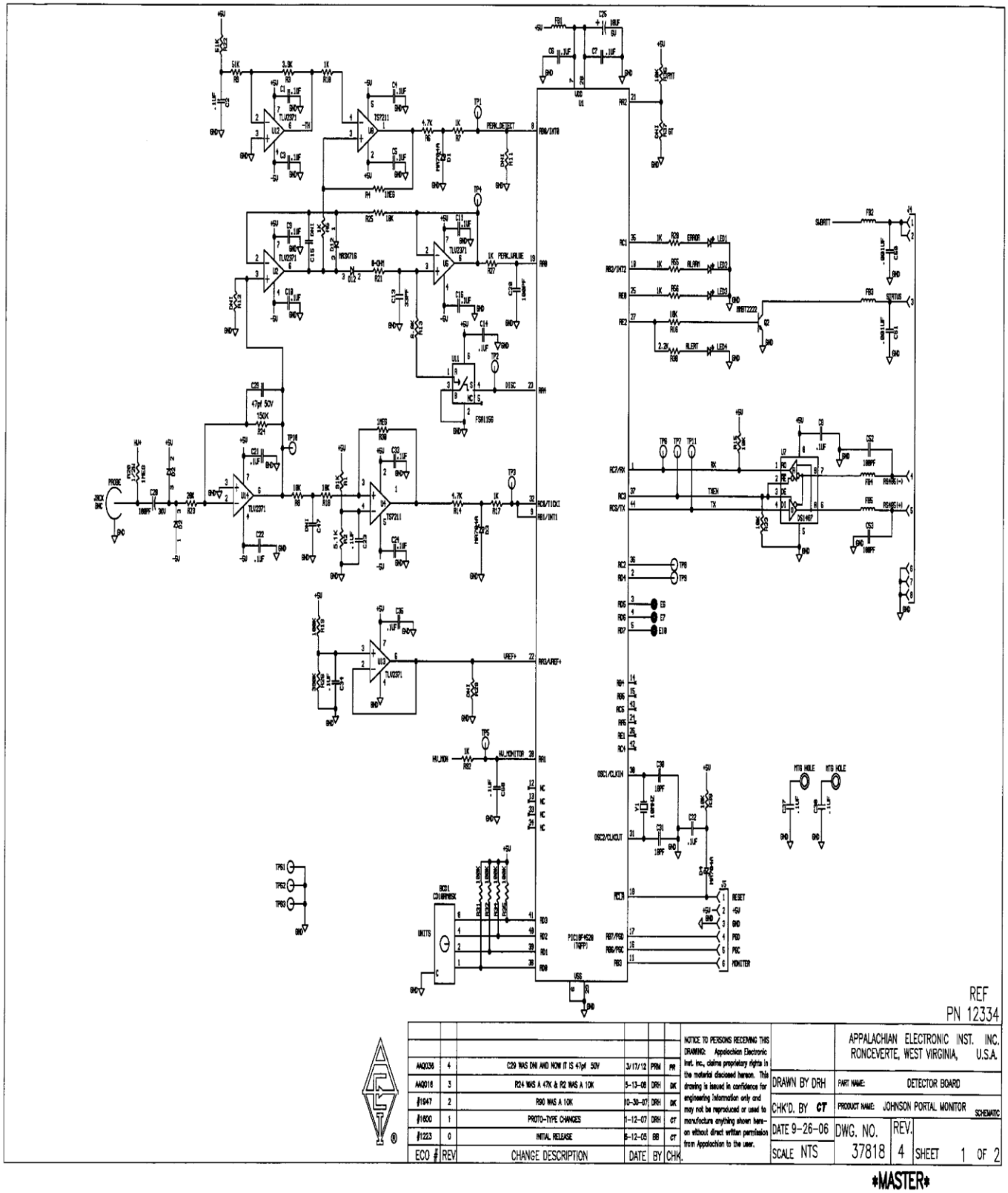

5.4 DETECTOR BOARD COMPONENT LAYOUT

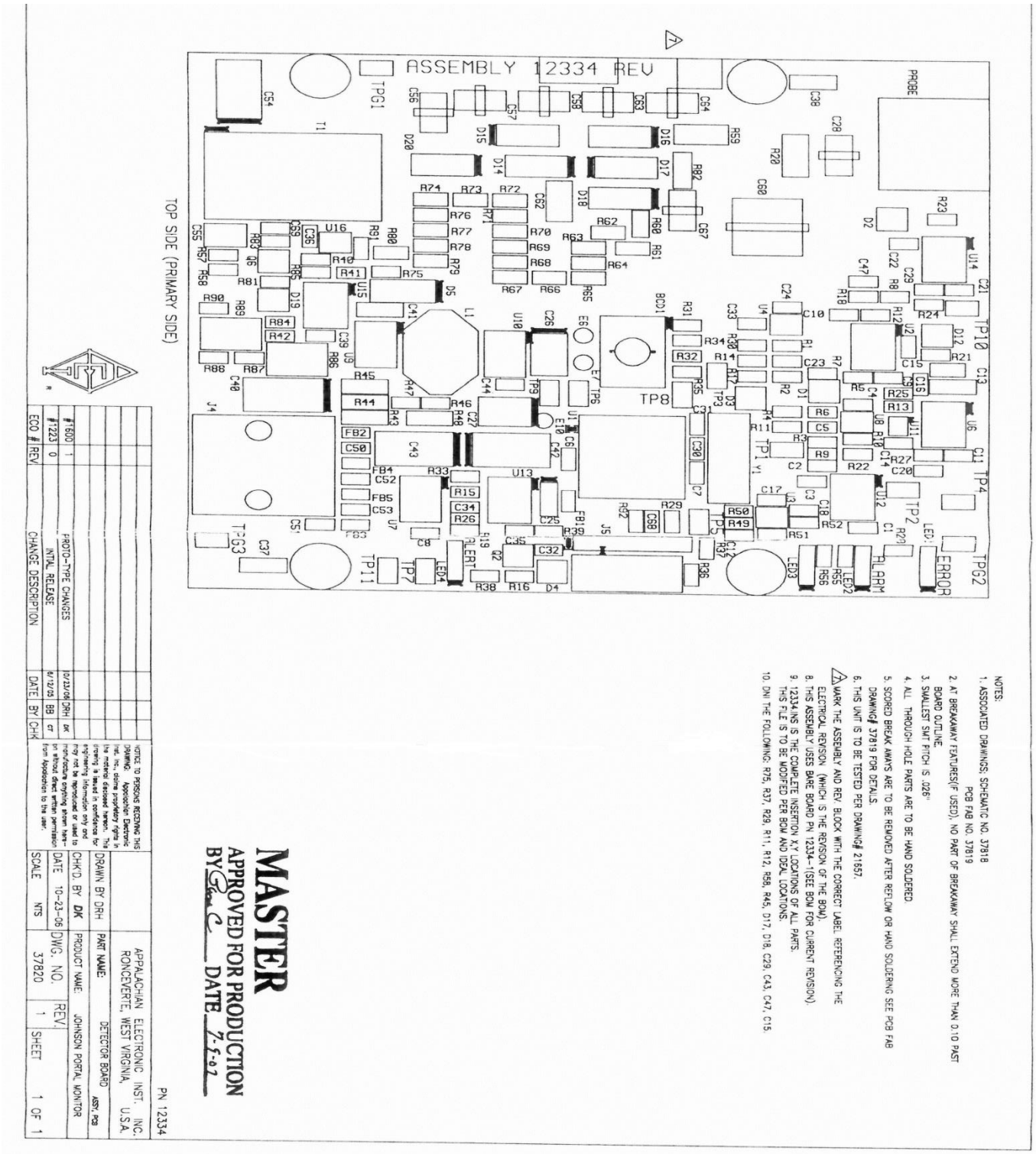

ATTACHMENT A

AM-801 FUNCTIONAL TEST DOCUMENT

AM-801 MDL _____ AM-801 S# _____ Cs-137 C S S# _____ DATE:_____

TEST SETTINGS:

Mode of Operation for Test: (AREA MONITOR) (WALK THRU) (TIMED COUNT # of seconds _____)

Minimum BKG Set Point: _____ cps Maximum BKG Set Point _____ cps

FUNCTIONAL TEST:

	BKG CPS	CS RANGE CPS +/- 20%	AS FOUND SOURCE CPS*	AS LEFT SOURCE CPS*	AS FOUND HV	AS LEFT HV
DETECTOR 1						
DETECTOR 2						
DETECTOR 3						
DETECTOR 4						
HEAD DETECTOR						
FOOT DETECTOR						

*** Check Source (CS) in contact with middle of detector**

SENSITIVITY TEST "WALK THRU" MODE:

ALARM Set Point _____cps

ALARMED: DET 1 YES / NO DET 2 YES / NO DET 3 YES / NO DET 4 YES / NO

THE FOLLOWING WERE TESTED AND RESPONDED CORRECTLY (please initial): _____

AUDIBLE ALARM _____ VISUAL ALARM(S) _____ VOICE COMMANDS _____

COMMENTS:

TEST PERFORMED BY: _____ DATE: _____